Service

SHOP DOPE BULLETIN NO. 384 3-8-57

REMOVING AND INSTALLING FLYWHEELS AND SPROCKET SHAFT BEARING IN CRANKCASE 1955 AND LATER FL MODELS WITH TIMKEN BEARING

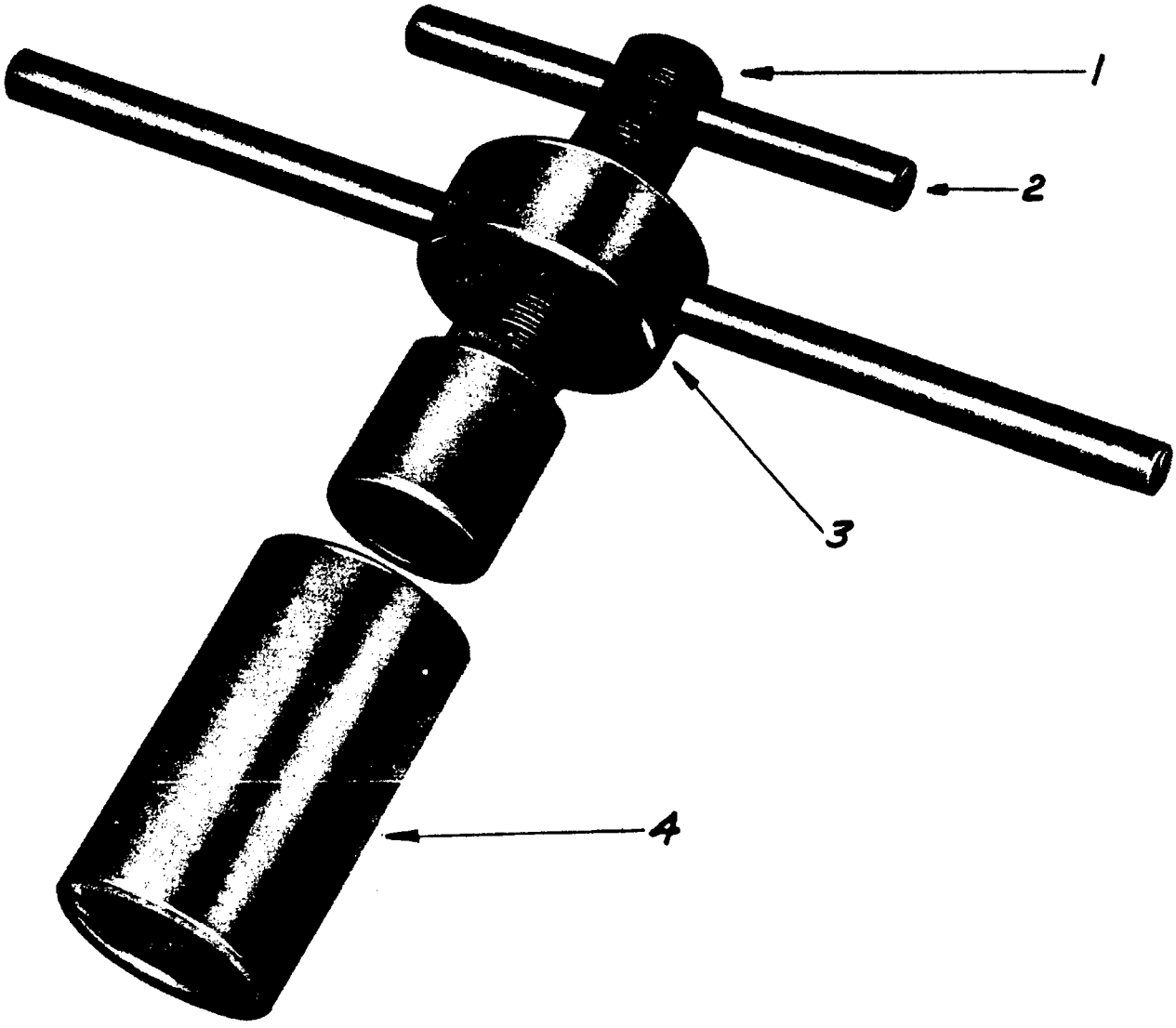

Figure 1.

Tool Set For Installing Flywheel Assembly, Part No. 97225-55.

Item	Description
1	Screw
2	Handle
3	Driver
4	Sleeve

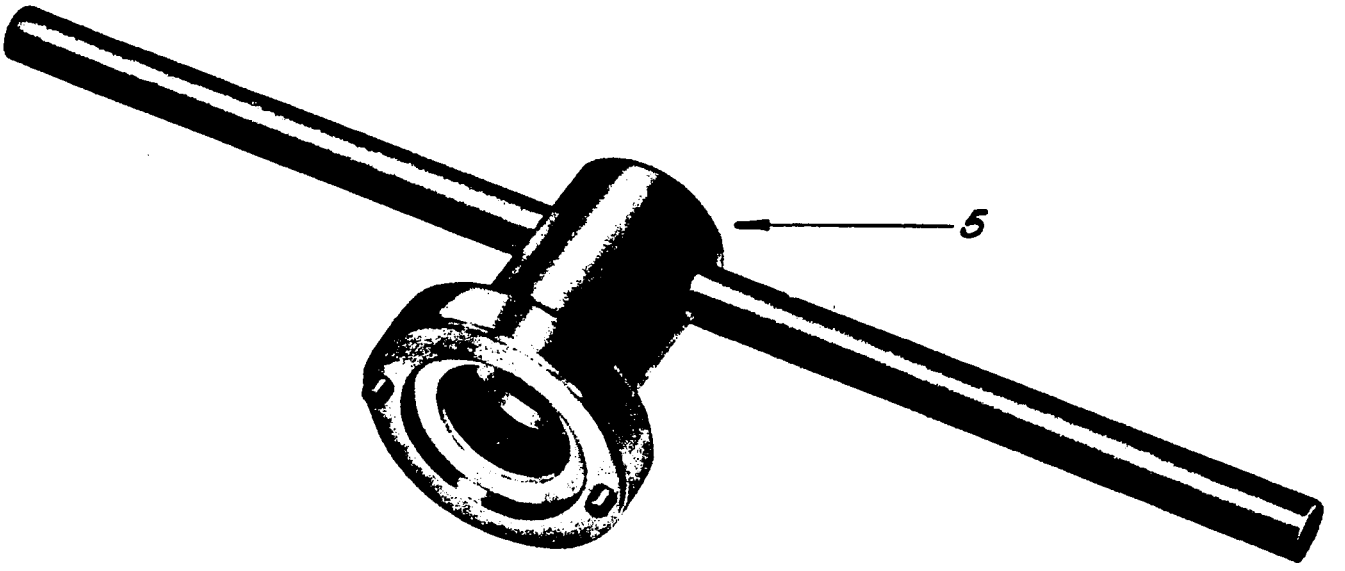

Figure 2. Sprocket Shaft Bearing Nut Wrench, Part No. 97235-55.

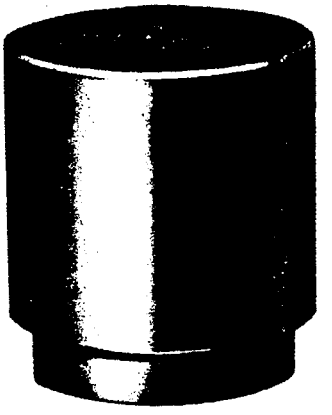

Figure 3.

Sprocket Shaft Bearing Outer Race Press Plug, Part No. 97194-57.

(Note: The two tools shown in Figures 2 and 3 are not included in tool set, part No. 97225-55 of Figure 1. They must be ordered separately.)

REMOVAL OF FLYWHEEL ASSEMBLY FROM SPROCKET SIDE CRANKCASE

(Note: If bearing outer races are not going to be removed for inspection or replacement, remove flywheels as directed in this paragraph, at this time.
If bearing races are to be removed, skip this paragraph, and follow directions in second paragraph headed, "REMOVING BEARING OUTER RACES FROM SPROCKET SIDE CRANKCASE.) Press out flywheel assembly from sprocket side (right) crankcase with an arbor press, supporting crankcase on parallel bars resting on press table, and pressing down on sprocket shaft end. (See Figure 4 below.)

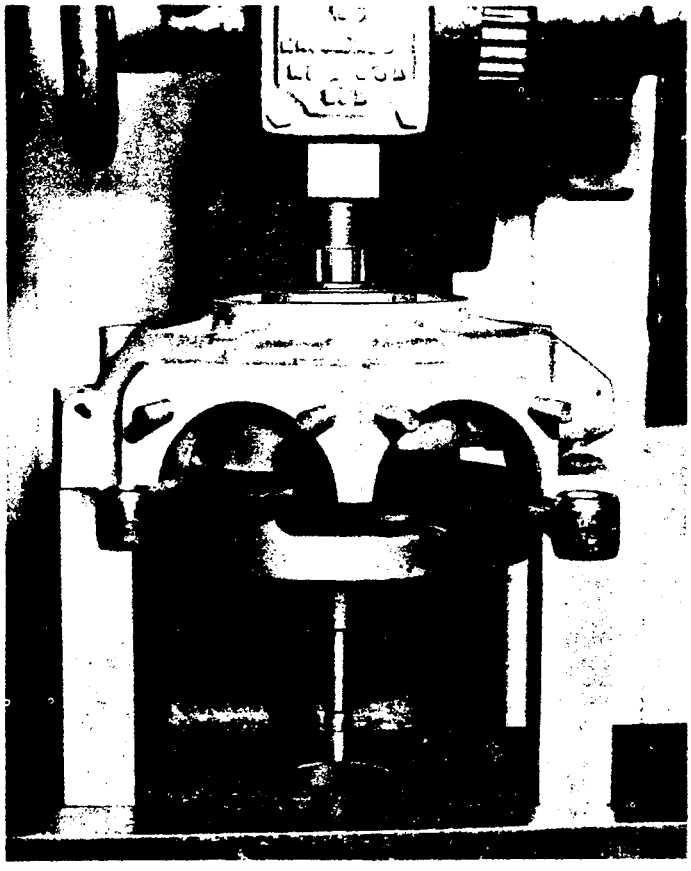

Figure 4.

(All bearing parts except flywheel side inner race are pressed from sprocket shaft. Outer race parts can be removed from crankcase with arbor press according to instructions in the following paragraph.)

REMOVING BEARING OUTER RACES FROM SPROCKET SIDE CRANKCASE

(Note: Since it is not necessary to remove Timken bearing outer races in order to remove flywheel assembly from crankcase, the following procedure for outer race removal should be performed only if the bearing outer races are to be inspected or replaced.)

Hold pinion shaft end of flywheels (with sprocket side of crankcase assembled) between copper jaws in a vise. Remove sprocket shaft bearing outer race lock nut from sprocket side of crankcase bushing using sprocket shaft bearing nut wrench, part No. 97235-55. (See Figure 2.) Turn lock nut to right, since this is a left hand thread. (See Figure 5 below.)

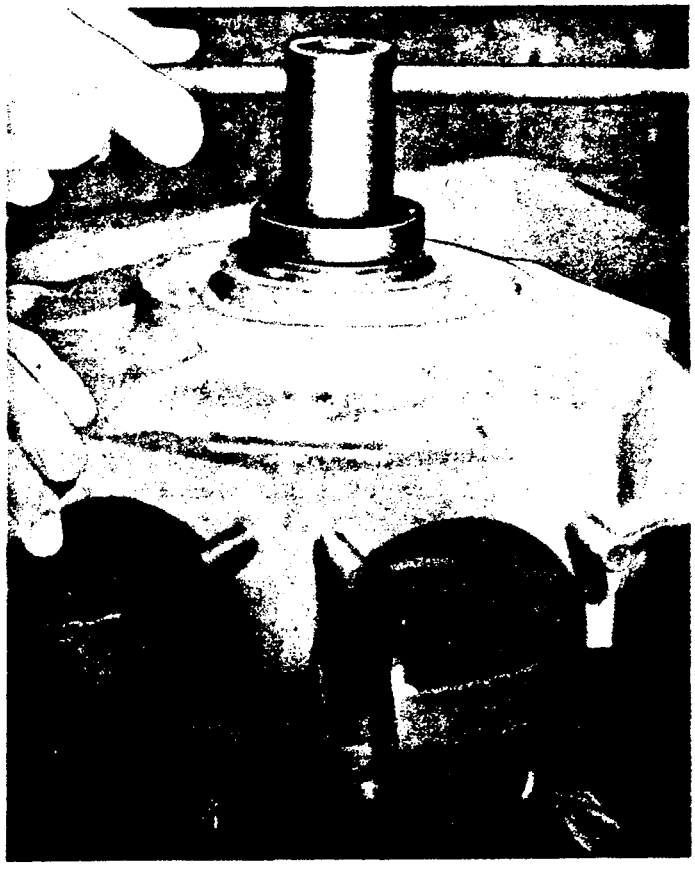

Figure 5.

After outer race locknut has been removed, press out flywheels according to previous paragraph headed, "REMOVAL OF FLYWHEEL ASSEMBLY FROM SPROCKET SIDE CRANKCASE." Remove flywheel side outer race snap ring from holding groove in crankcase bushing. Supporting flywheel side of crankcase half with parallel bars on table of arbor press, press out outer races and spacer, using,outer race press plug, part No. 97194-52. (See Figures 3 and 6.)

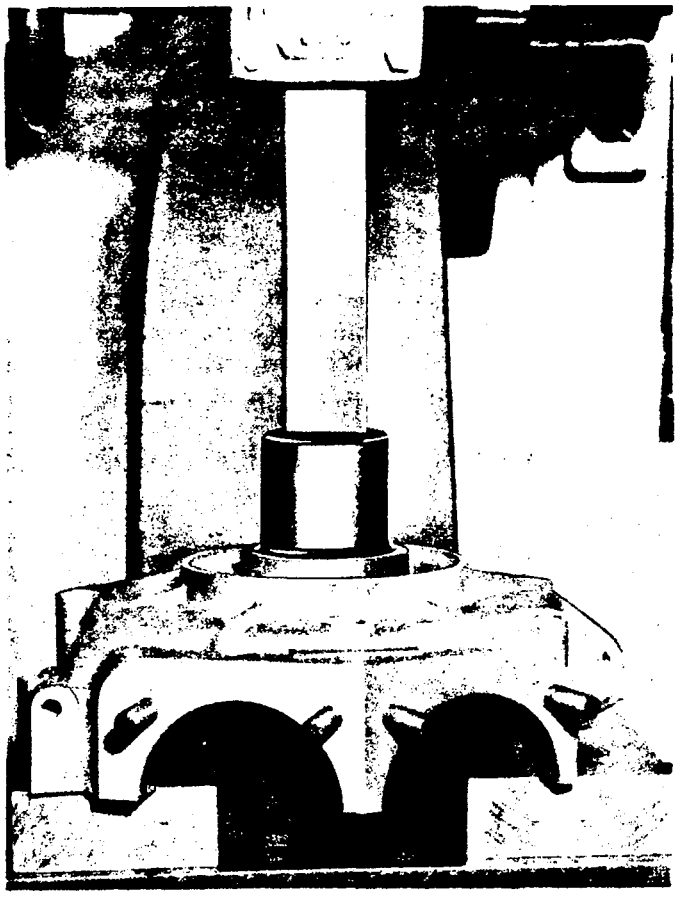

Figure 6.

REMOVAL OF FLYWHEEL SIDE BEARING FROM FLYWHEEL SPROCKET SHAFT

(Note: Bearing removal is necessary only when flywheels are disassembled, or entire sprocket shaft bearing is replaced.)

Holding flywheel assembly between copper jaws in a vise, use sprocket shaft bearing inner race puller, part No. 96015-56 (See Shop Dope Bulletin No. 385) to remove bearing from flywheel sprocket shaft. Place hooked ends of 2 puller halves behind bearing, and slip round holding collar over outside diameter, down to bearing end. Engage puller screw cross in puller slots and pull bearing off by tightening puller screw against sprocket shaft center.
(See Figure 7.)

INSTALLING BEARING OUTER RACES IN SPROCKET SIDE CRANKCASE

Install flywheel side outer race snap ring in groove in crankcase bushing. Using arbor press and outer race press plug, part No. 97194-57, press outer races and separating spacer into crankcase bushing one at a time, starting with flywheel side race, then spacer, and last sprocket side race.

Figure 7.

Press in parts to bottom on snap ring, being sure that tapers against which the bearings roll are facing the proper way as shown in section view (Figure 10).

INSTALLING FLYWHEEL SIDE SPROCKET SHAFT BEARING ON FLYWHEEL ASSEMBLY

If flywheel side sprocket shaft bearing has been removed for any reason, install with tool set 97225-55 (Figure 1) on previously assembled and aligned flywheels as follows:

Turn tool screw (1) onto sprocket shaft thread using handle (2) and tighten snugly. Remove handle and slip bearing, taper side out, over sprocket shaft so that it starts squarely on end of sprocket shaft. Follow this with bearing spacer and then add on top of this an extra spacer (Part No. 24029-55, sprocket spacer, can be used for this purpose). Now using sleeve (4), place over shaft against spacer. Press bearing against sprocket shaft flange as shown in Figure 8, using driver (3) on screw. Remove part No. 24029-55 extra spacer, leaving the one bearing spacer on sprocket shaft.

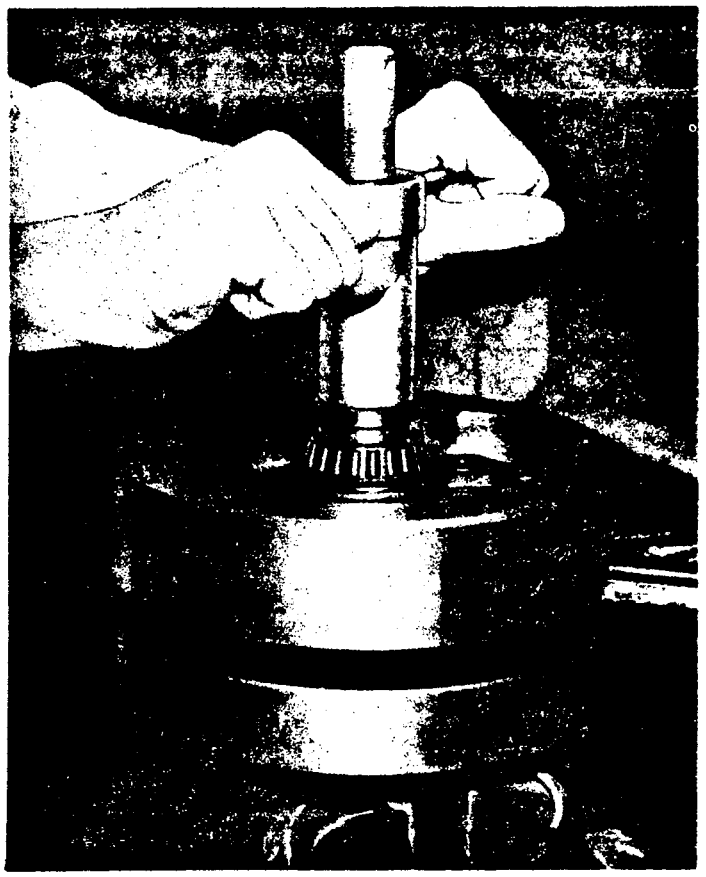

Figure 8.

INSTALLING FLYWHEELS INTO CRANKCASE

Hold pinion gear shaft end of assembled and aligned flywheels between copper jaws in a vise - sprocket shaft with flywheel side bearing and spacer already installed and facing up.

Taking sprocket side crankcase, having bearing outer races less outer race locknut already assembled, per previous instructions, place over sprocket shaft so that outer race rests squarely on the flywheel side bearing.

Next, turn tool screw (1, Figure 1) on sprocket shaft thread using handle (2) and tighten snugly. Remove handle and slip sprocket side bearing over sprocket shaft so that it starts squarely on end of sprocket shaft. Be sure that tapered side of bearing faces flywheel side. Install tool collar (4) on screw placing bottom against bearing.

Start driver (3) on screw and bring driver down against sleeve (4), as shown in Figure 9.

Continue turning the driver clockwise until the two halves of the bearing are brought together tightly against the spacer.

(Note: The two bearings must be tight against the bearing spacer in order to provide correct bearing clearance.)

Install bearing locknut in crankcase using sprocket shaft bearing nut wrench, part No. 97235-55, as shown in Figure 2. This nut should be started by hand turning counterclockwise, since this is a left hand thread. Final tightening of the locknut can be left until the crankcase is assembled and held more rigid. At that time the nut should be staked with a punch at the slot, punching metal into the slot, locking nut into place.

Figure 10 shows bearing parts completely assembled in engine crankcase.

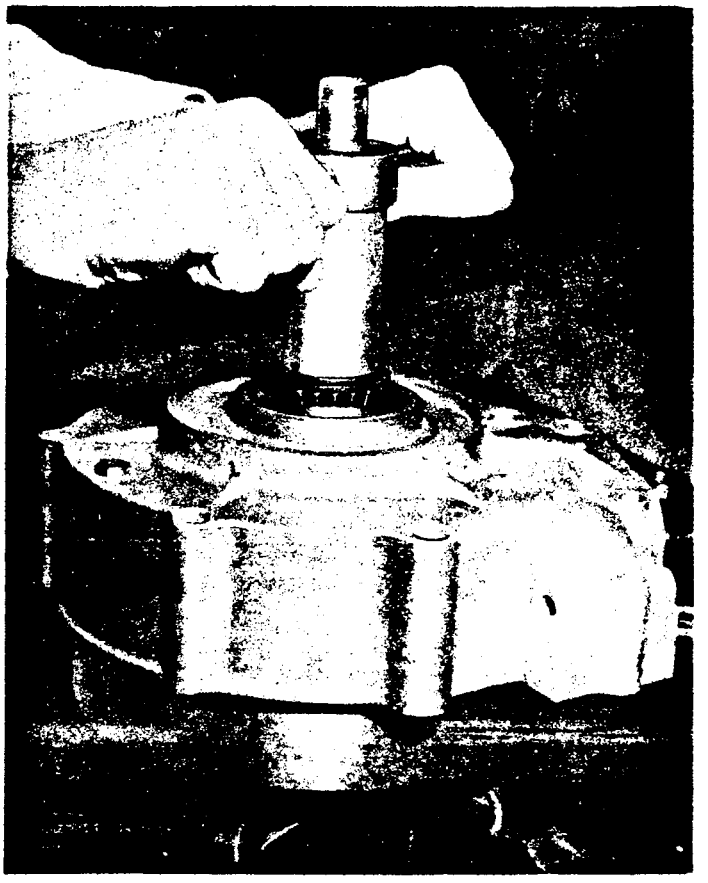

Figure 9.

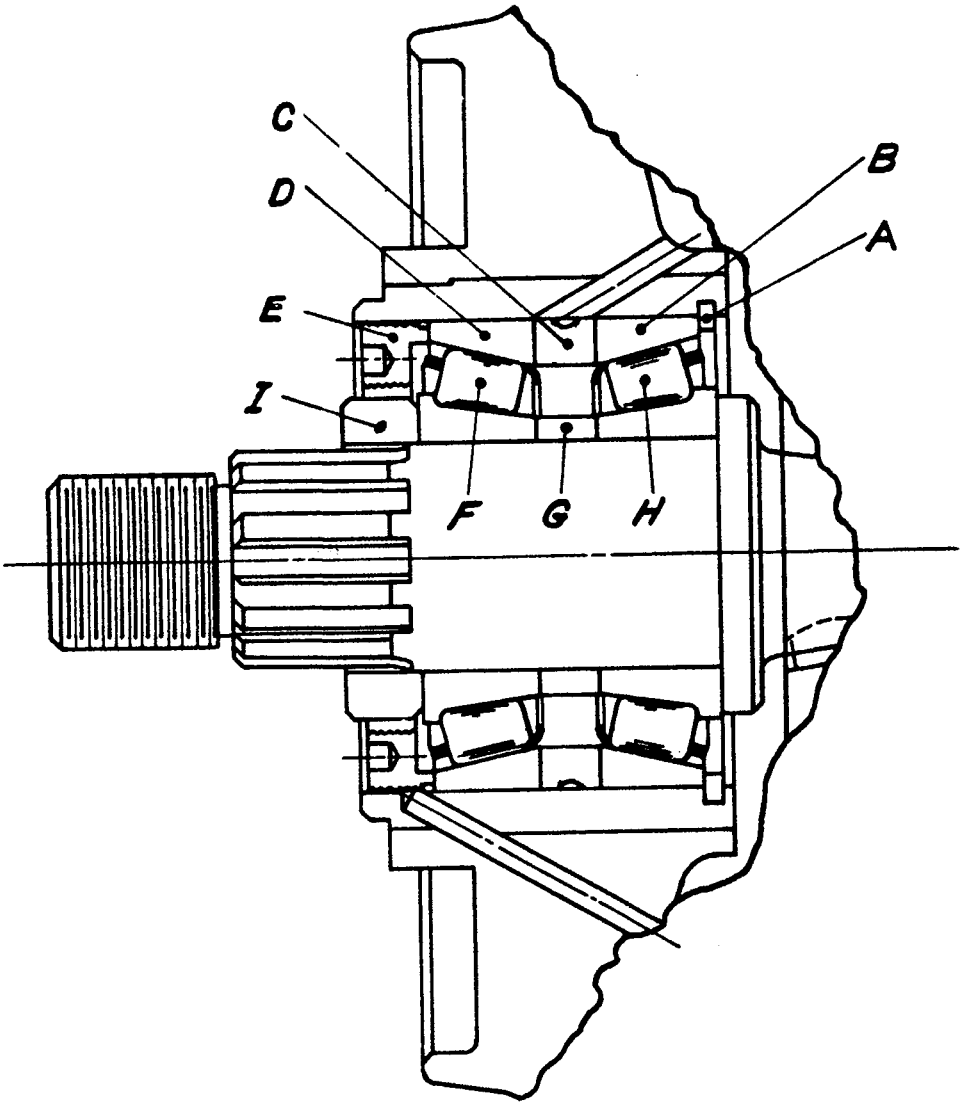

Figure 10.

Sprocket Shaft Timken Bearing Assembled

A Snap Ring
B Outer Race (flywheel side)
C Outer Race Spacer
D Outer Race (sprocket side)
E Outer Race Locknut
F Bearing (sprocket side)
G Bearing Spacer
H Bearing (flywheel side)
I Sprocket Spacer