SERVICE BULLETIN

M-1403 April 16, 2015

2015 STREET LICENSE PLATE REFLECTOR REGULATORY NON-COMPLIANCE RECALL CODE 0620

Purpose

Certain model year 2015 Street family motorcycles built before 3/10/2015 in the Kansas City plant for the North America market (Domestic, California, Mexico and Canada configurations) may have been built without a rear reflector (Part No. 59988-72A). Without this reflector installed, the vehicle does not meet the lighting requirements of FMVSS 108 (U.S.) and CMVSS 108 (CAN). If this reflector is not installed it could reduce the rear conspicuity of the vehicle, possibly increasing the risk of a crash under certain conditions.

Overview

- **Kit required**: Yes
- **Wave shipments**: Begin on or before April 16, 2015
- **Affected vehicles**: Some 2015 Street model motorcycles.
- **Solution**: Install recall kit.

Motorcycles Affected

Some 2015 Street models that were produced without rear reflector (Part No. 59988-72A) are affected.

A VIN list specific to motorcycles shipped to your dealership is available via h-dnet. This list may be found by following this path:

- h-dnet.com/Service Toolbox/Warranty Campaign Center/Safety Campaign and Open VIN lists.

Select 0620 campaign to view the VIN list.

NOTE

If the motorcycle does not appear on your dealer VIN list, refer to the Vehicle Information link to verify if motorcycle is affected.

If you are not sure that a recall has been completed on a particular motorcycle, check the recall records available on TALON and h-dnet.com. Many dealers will not have an affected motorcycle.

Canadian Dealers: To determine if a vehicle is affected by a recall, use the h-dnet.com vehicle information link found on the service tab of UltraComm.

Markets Affected

U.S. (including Puerto Rico and Guam), Canadian and Mexican markets are affected.

Customer Notification

In accordance with Federal regulations administrated by NHTSA, Harley-Davidson Motor Company, Inc. will send a letter to registered owners of affected products in the United States notifying them of this regulatory related condition and instructing them to contact their dealer for inspection and service. A sample of the customer letter is attached. Customers outside the United States may receive this notification by other means. Deeley Harley-Davidson Canada will send a letter to registered owners of affected product in Canada.

To protect the safety of our riders, it is our mutual responsibility to ensure the recall service is performed on all affected motorcycles. Therefore, we strongly urge you to perform the recall service even if the motorcycle was not purchased from your dealership. You are also required to perform the recall service on all affected models in your dealership inventory prior to delivering, renting or leasing those models.

NOTE

Because only registered owners appearing on the VIN list located at h-dnet.com will receive notification from us, we request that you contact any owners of affected motorcycles still listed as unregistered. Advise them of the noncompliance recall and make arrangements for them to come in for recall service. We also require that you provide us with their names, addresses and VINs as soon as possible to enable us to mail them an owner's letter, as required by the National Traffic and Motor Vehicle Safety Act (as amended).

Kit Ordering Information: U.S. Market

One limited quantity wave shipment of recall kit (Part No. 91500081) will begin on or before April 16, 2015. The order form will be attached to this bulletin once the wave shipment is complete. All kits will be shipped no charge, transportation paid via UPS1.

NOTE

In the interest of preserving customer safety and satisfaction, always check for outstanding recalls whenever any motorcycle is brought into your dealership for either maintenance or service.

ROUTING	SERVICE MANAGER	SALES MANAGER	PARTS MANAGER	WARRANTY PROCESS MANAGER	LEAD TECHNICIAN	TECHNICIAN NO. 1	TECHNICIAN NO. 2	TECHNICIAN NO. 3	RETURN THIS TO
INITIAL HERE									

© 2015 H-D

Table 1. Recall Code 0620 Kit Contents (Part No. 91500081)

ITEM	PART NO.	QTY
Reflector, red	59988-72A	1
Bracket, reflector	60907-09	1

Ordering Information: Non-U.S. Market

Contact your local Harley-Davidson service area representative for authorization, ordering and return instructions.

Canada

An initial wave shipment of recall kit (Part No. 91500081) will be sent based on retailers allocations of affected units. This bulletin will be revised with an order form when wave shipments have been terminated.

Mexico

Contact the local service area representative at Harley-Davidson Mexico.

Required Dealer Action

1. Verify that the motorcycle is involved in this recall.
2. Remove license plate (if necessary).
3. See Figure 1. Remove adhesive backing from reflector (1). Carefully center and align the reflector with the reflector installation location (3) on reflector bracket (2). Press reflector firmly into place.
4. Install reflector bracket to license plate bracket (4).
5. Install license plate (if necessary).

Upon completion of the recall, follow the instructions listed under the appropriate Credit Procedure. Submit recall claims promptly.

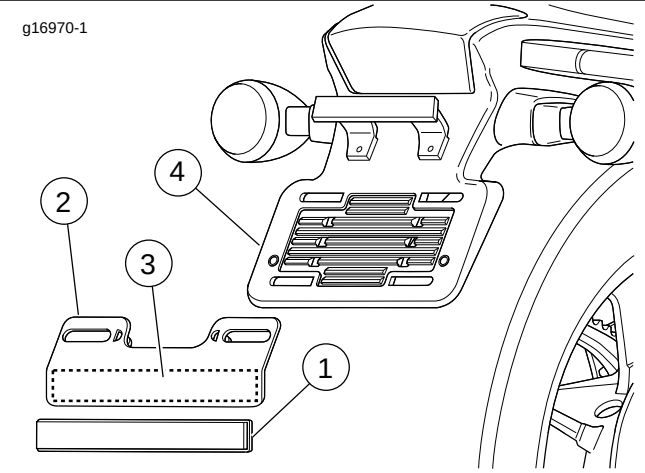

1. **Reflector**
2. **Reflector bracket**
3. **Reflector installation location**
4. **License plate bracket**

Figure 1. Reflector

Credit Procedure: Talon/h-dnet.com Warranty Claim System Users

Complete an electronic recall claim referencing this service bulletin number.VIN number is required.

Table 2. NON-COMPLIANCE RECALL CODE 0620

ITEM	DATA
Claim Type	SRC
Problem Part Number	59988-72A
Quantity	Leave Blank
Primary Labor Code	2697
Labor Time	0.1 hours
Customer Concern Code*	0620
Condition Code	9981
Replacement Part No.	91500081
Quantity	1
* These items may need to be downloaded to your system.	

Credit Procedure: All Other System Users

Table 3. CANADA

DATA
Claim Date
Campaign Number (0620)
Fix ID C -- Corrected
Full Seventeen Character VIN

Upon submission of the properly completed recall claim, you will be credited for labor including appropriate market administrative time. The non-compliance recall record will be updated. Submit campaign events on their own warranty claim. Do not mix them with other warranty events.